Attachment 5: Sheet C1.1 Civil Details

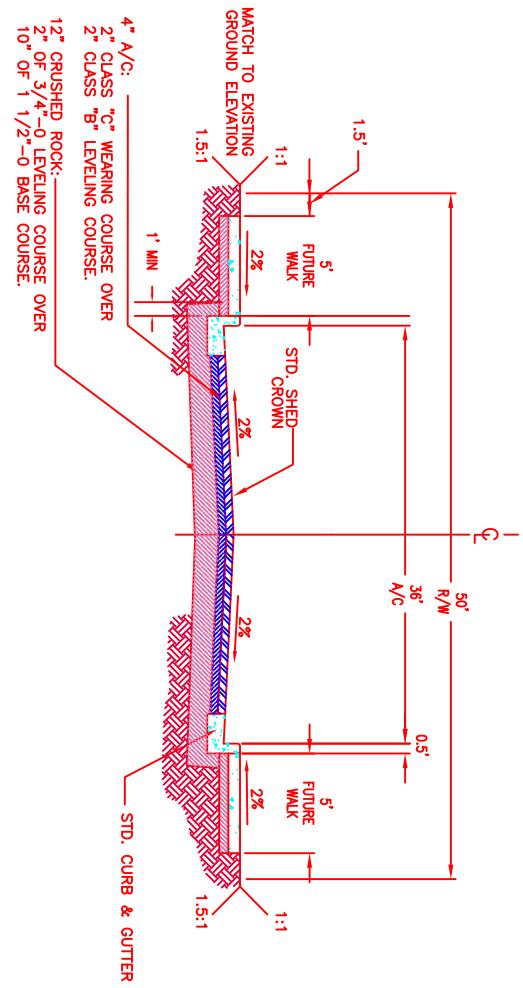

TYPICAL 36' STREET CROSS SECTION
W/50' RIGHT-OF-WAY N.T.S.

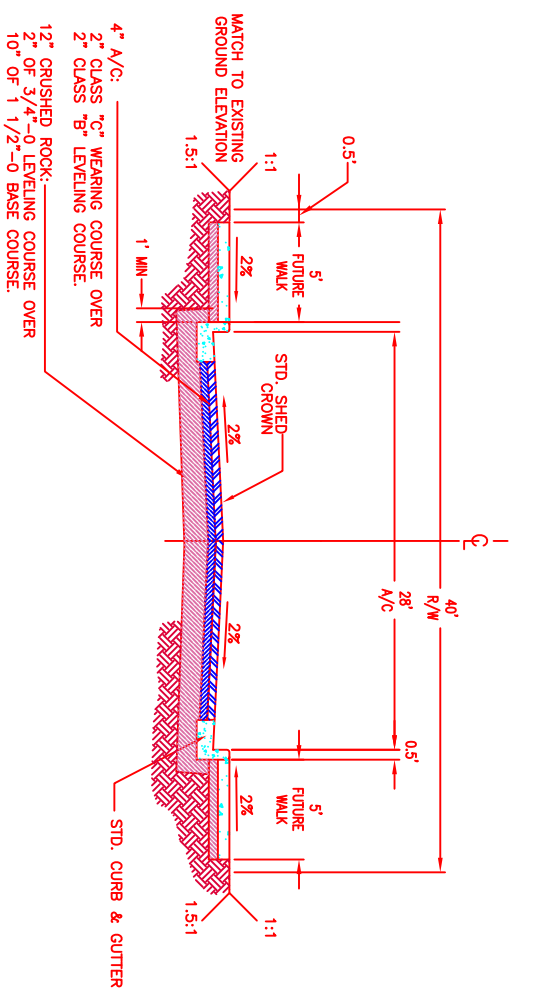

TYPICAL 28' STREET CROSS SECTION
W/40' RIGHT-OF-WAY N.T.S.

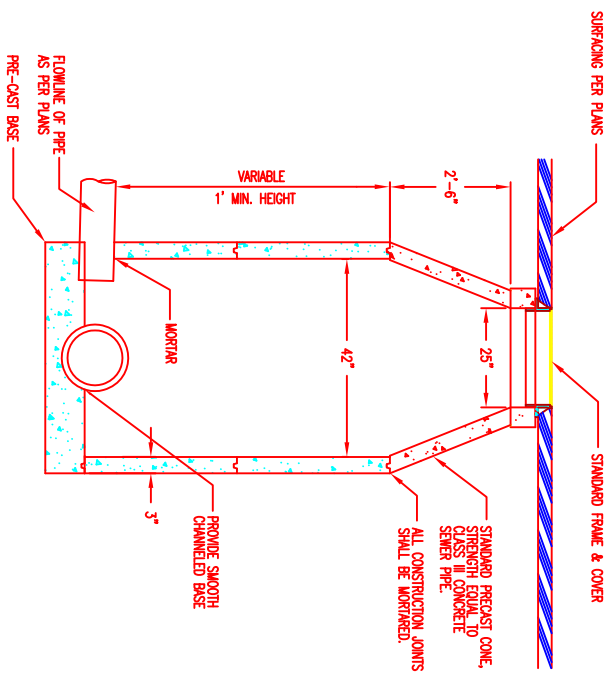

STANDARD MANHOLE DETAIL
N.T.S.

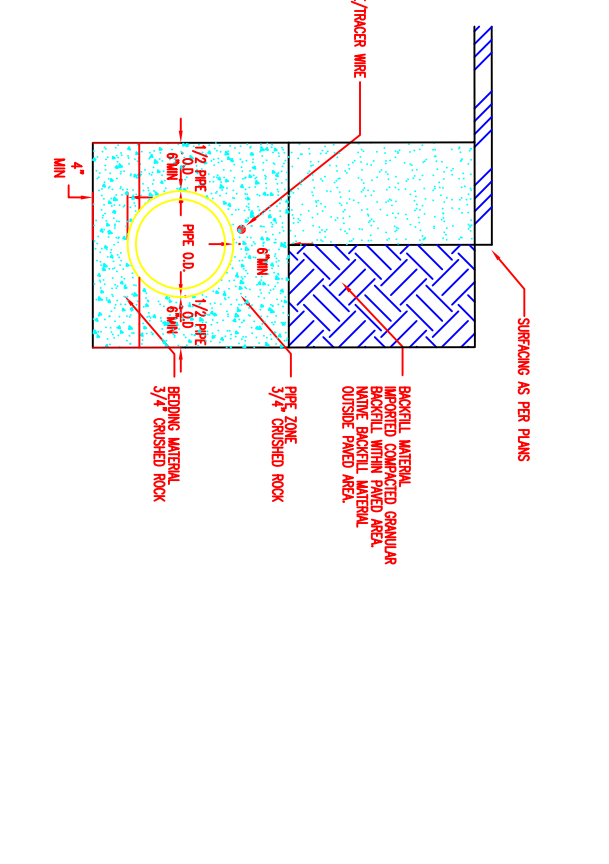

TYPICAL TRENCH DETAIL
N.T.S.

SHEET C-1.1

PROJECT No. 1052
DRAWN BY: tcl
REVIEWED BY: sdm
PROJECT DATES:
CITY SUBMITTAL 10/3/13

Civil Details
for
Brenalain Court Phase II
Junction City Lane County Oregon

REGISTERED PROFESSIONAL ENGINEER 16,663 OREGON JULY 20, 1993 SCOTT DEAN MORRIS
EXPIRES 12/14

A & O Engineering LLC
CONSULTING ENGINEERS & SITE PLANNING
380 Q ST. SUITE 200
SPRINGFIELD, OR. 97477
PHONE: (541) 302-9790
scott@aoengineering.biz