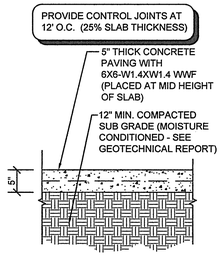

1 CONCRETE PAVING SECTION
C3 SCALE: 3/4" = 1'-0"

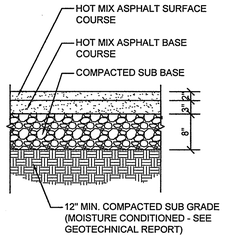

2 ASPHALT PAVING SECTION
C3 SCALE: 3/4" = 1'-0"

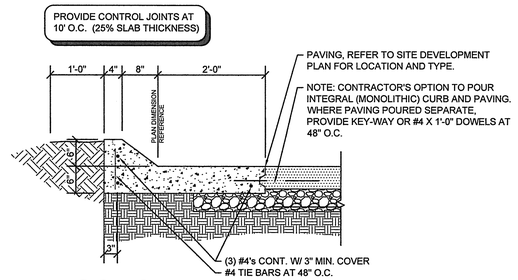

3 CONCRETE CURB SECTION
C3 SCALE: 3/4" = 1'-0"

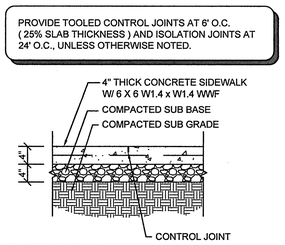

4 CONCRETE SIDEWALK SECTION
C3 SCALE: 3/4" = 1'-0"

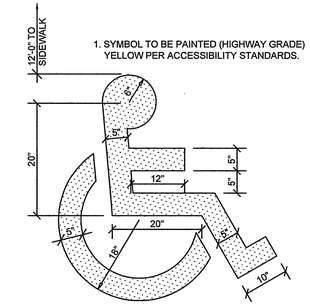

5 HANDICAP PARKING SYMBOL
C3 SCALE: 3/4" = 1'-0"

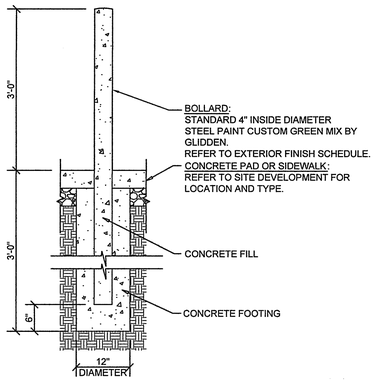

6 STEEL BOLLARD SECTION
C3 SCALE: 3/4" = 1'-0"

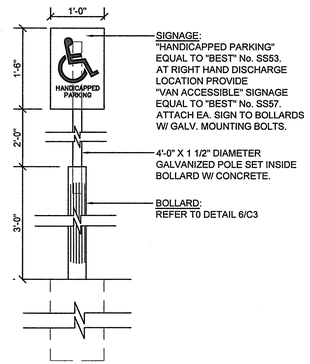

7 HANDICAP PARKING SIGN
C3 SCALE: 3/4" = 1'-0"

8 NOT USED
C3 SCALE: N.T.S.

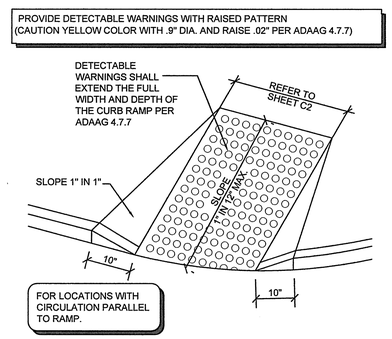

9 CONCRETE HANDICAP RAMP
C3 SCALE: N.T.S.

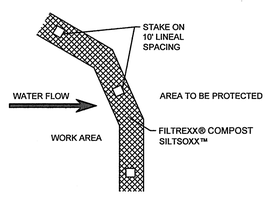

FILTREXX® SILTSOXX™ PLAN VIEW

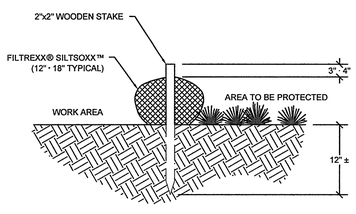

FILTREXX® SILTSOXX™ SECTION

NOTE:
1. ALL MATERIAL TO MEET FILTREXX ® SPECIFICATIONS OR APPROVED EQUAL.
2. SILTSOXX™ COMPOST/JSOIL/ROCK/SEED FILL TO MEET APPLICATION REQUIREMENTS.
3. SILTSOXX™ DEPICTED IS FOR MINIMUM SLOPES. GREATER SLOPES MAY REQUIRE LARGER SOCKS PER THE ENGINEER.
4. COMPOST MATERIAL TO BE DISPERSED ON SITE, AS DETERMINED BY ENGINEER.

10 FILTREXX® SILTSOXX™
C3 SCALE: NTS

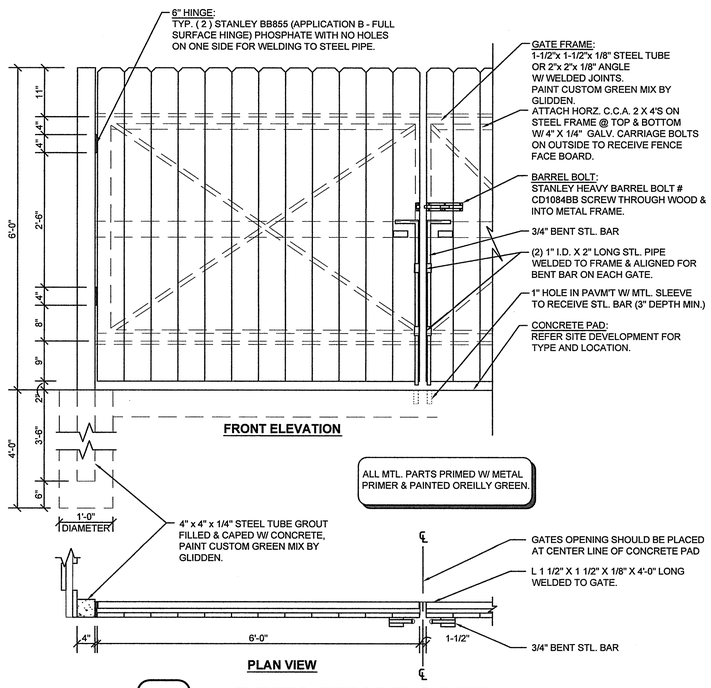

11 SCREEN FENCE GATE
C3 SCALE: 3/4" = 1'-0"

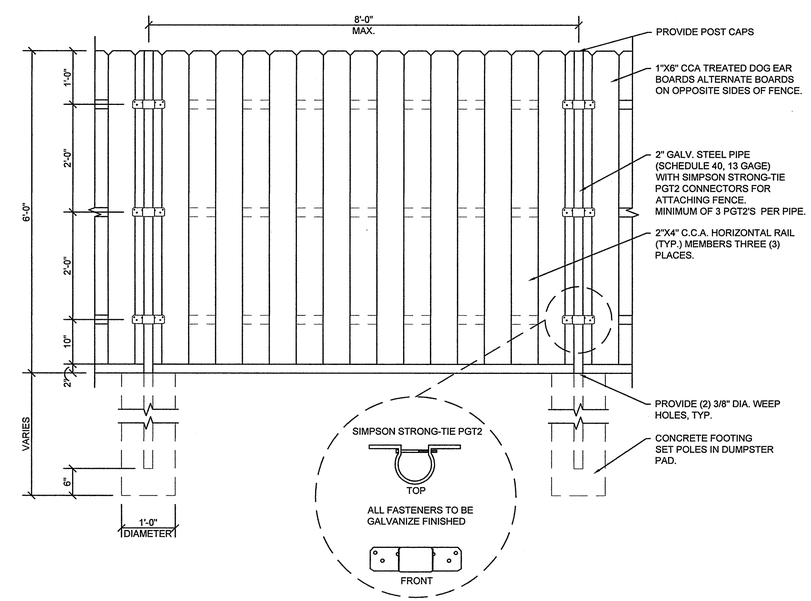

12 SCREEN FENCE
C3 SCALE: 3/4" = 1'-0"

REGISTERED ARCHITECT
THOMAS A. LUNDBERG
SPRINGFIELD, MO
STATE OF OREGON
9-27-13

THOMAS A. LUNDBERG
ARCHITECT
1736 East Sunshine, Suite 417
Springfield, Missouri 65804
417.862.0658
Fax: 417.862.3265
e-mail: architect@estertyscanether.com

New O'Reilly Auto Parts Store:
IVY STREET
JUNCTION CITY, OR

O'Reilly AUTO PARTS
233 SOUTH PATTERSON
SPRINGFIELD, MISSOURI 65802
417-862-2674 PHONE

COMM # 3484

DATE: 9-27-13
REVISION DATE: